Product Dimensions

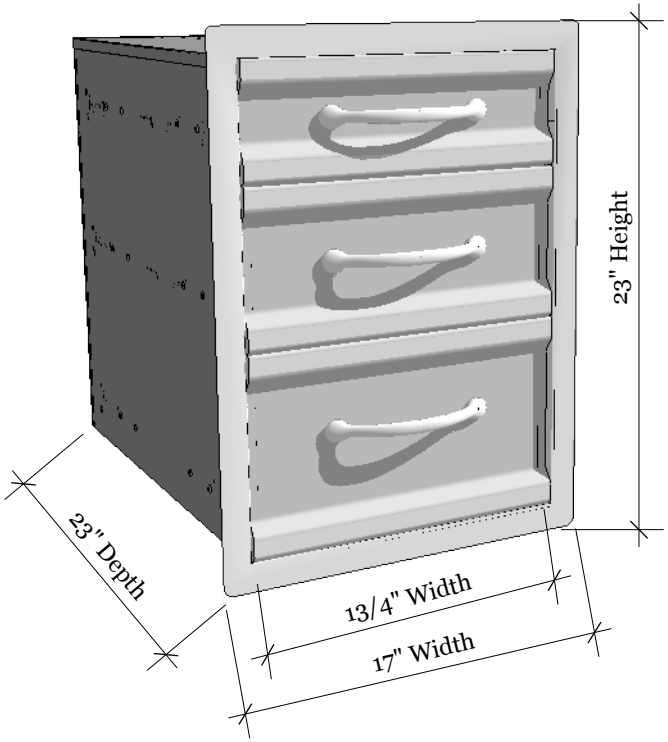

Cut-Out Dimensions

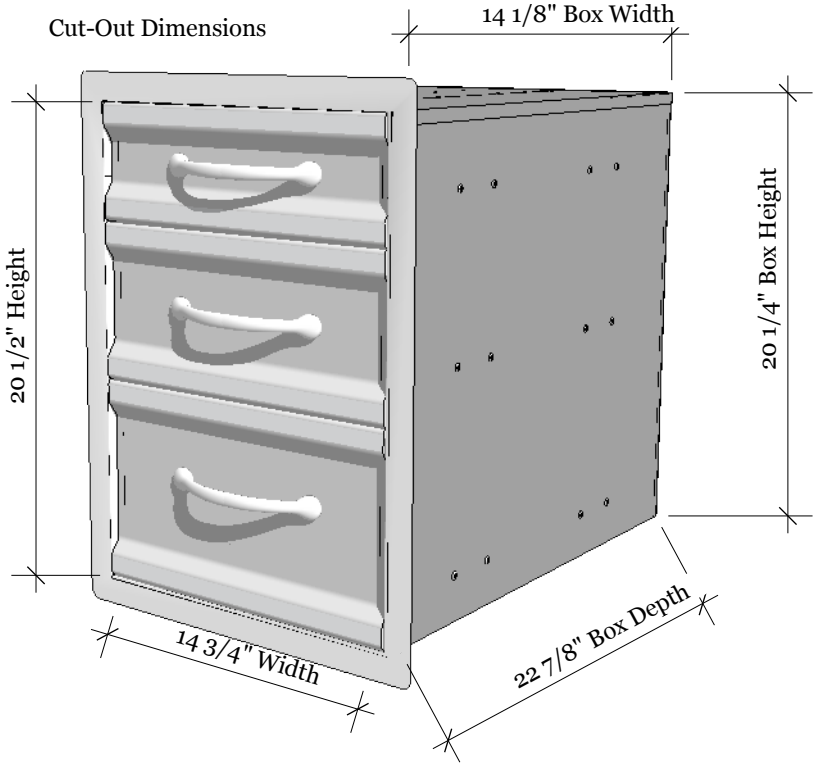

DBA Design Backyard
Austin TX 78681
Tel: 888.388.3366
Fax: 512.358.4049

PRODUCT
SUN PREMIUM TRIPLE ACCESS DRAWER
Item No. C-TD20

DESCRIPTION
304 stainless construction, flush mounted Polished Look. Drawers are fully enclosed.

Premium Triple Access Drawer
17"W x 23"H x 23"D(Product Size)
14-3/4"W x 20 -1/2"H (Cut-out)
59 LBS (Weight)

Material Specifications:
304 stainless steel
16 Gauge for Frame
18 Gauge for Panel
18 Gauge galvanized Box
Handles are made of zinc alloy, chrome plated.

ISO View

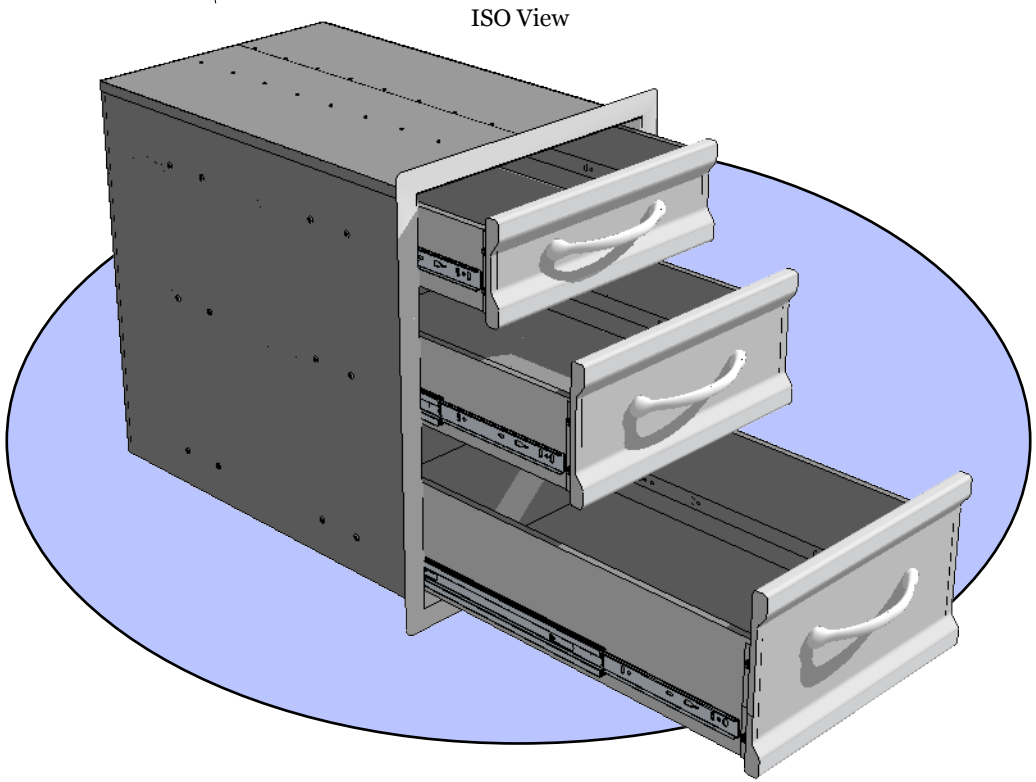
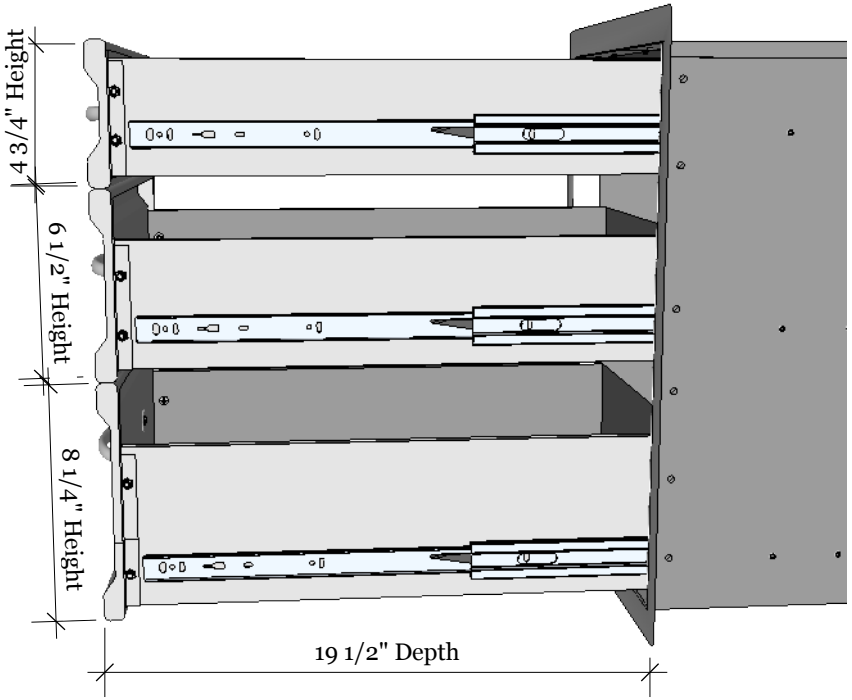
Drawer Extension